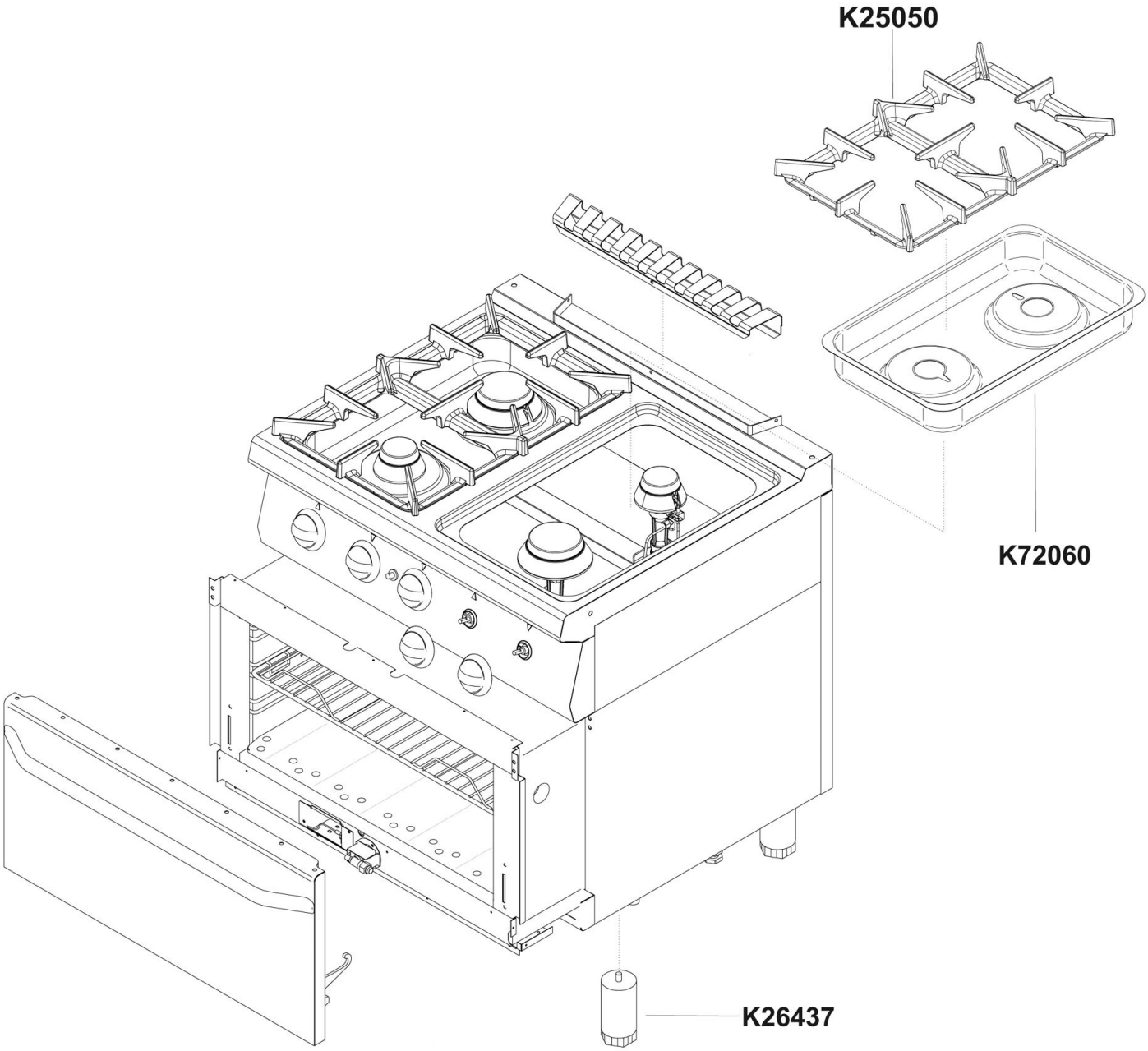
K25050
K72060
K26437

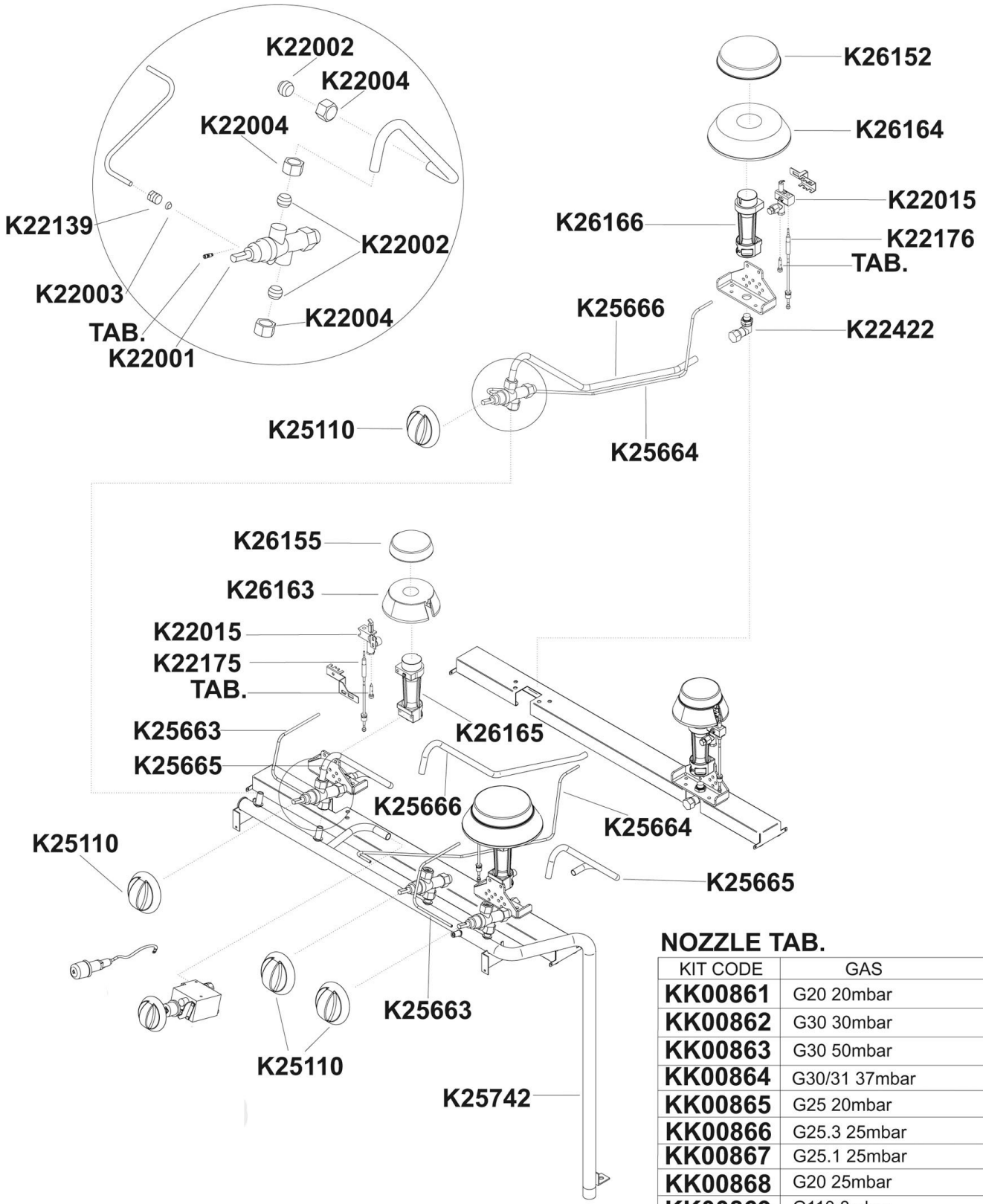

NOZZLE TAB.

KIT CODE	GAS
KK00861	G20 20mbar
KK00862	G30 30mbar
KK00863	G30 50mbar
KK00864	G30/31 37mbar
KK00865	G25 20mbar
KK00866	G25.3 25mbar
KK00867	G25.1 25mbar
KK00868	G20 25mbar
KK00869	G110 8mbar

Pos.	Artikelbeschreibung	Description of item	Artikel Nr./Item No.
K25050	Rost	Grid	E0K25050
K26437	Fuß H130/190, mit Gewinde	Foot H130/190, w. thread	E026437
K72060	Auffangschale	Burner bowls	E0K72060
Zubehör	Küchen-Reling 700-800	Kitchen rail 700-800	285201
K22001	Gashahn	Gas tap	049092
K22002	Doppelkegelring D 10 mm	Double taper seal D 10 mm	049818
K22003	Schneidring	Cutting ring	0MA673600
K22004	Mutter f. Doppelkegelring	Nut f. double taper seal	049819
K22015	Zündbrenner z. Kochstelle	Ignition burner f. hot plate	049088
K22139	Muffennippel, Messing	Bush nipple, brass	024540
K22175	Thermoelement Quick, 400 mm	Thermocouple Quick, 400 mm	049220
K22176	Thermoelement 850 mm	Thermocouple 800 mm	01916000
K22422	Düseneinsatz	Nozzle insert	E0K22422
K25110	Knebel, Gaseinstellung	Knob, gas setting	049062
K25663	Zündgasleitung	Pilot flame line	E0K25663
K25664	Zündgasleitung	Pilot flame line	E0K25664
K25665	Gasleitung Brenner vorne	Hose for burner front	E0K25665
K25666	Gasleitung Brenner hinten	Hose for burner back	E0K25666
K25742	Gasrampe	Gas ramp	E0K25742
K26152	Brennerdeckel D	Burner lid D TK	E0K26152
K26155	Brennerdeckel C	Burner lid C TK	E0K26155
K26163	Brennertulpe C	C-TK Burner	E0K26163
K26164	Brennertulpe D	D-TK Burner	E0K26164
K26165	Mischrohr C	Venturi hose C	E0K26165
K26166	Mischrohr D	Venturi hose D	E0K26166
KK00861	Düsensatz G20 20 mbar	Nozzle kit G20 20 mbar	E0KK00861
KK00862	Düsensatz G30 28-30 mbar	Nozzle kit G30 28-30 mbar	E0KK00862
KK00863	Düsensatz G30 50 mbar	Nozzle kit G30 50 mbar	E0KK00863
KK00864	Düsensatz G30/31 37 mbar	Nozzle kit G30/31 37 mbar	E0KK00864
KK00865	Düsensatz G25 20 mbar	Nozzle kit G25 20 mbar	E0KK00865
KK00866	Düsensatz G25 3-25 mbar	Nozzle kit G25 3-25 mbar	E0KK00866
KK00867	Düsensatz G25 1-25 mbar	Nozzle kit G25 1-25 mbar	E0KK00867
KK00868	Düsensatz G20 25 mbar	Nozzle kit G20 25 mbar	E0KK00868
KK00869	Düsensatz G110 8 mbar	Nozzle kit G110 8 mbar	E0KK00869

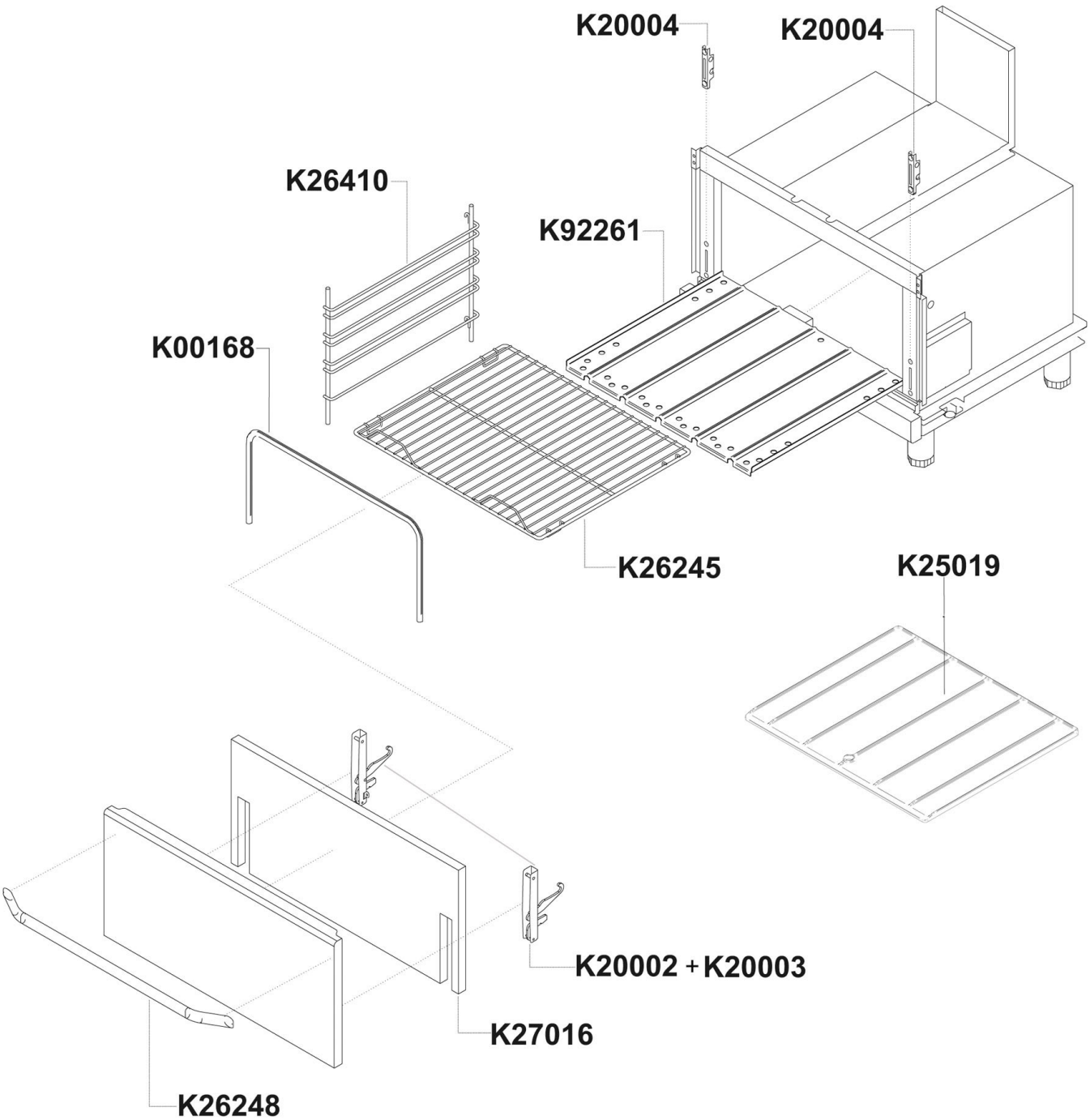
K20004
K20004
K26410
K92261
K00168
K26245
K25019
K20002 + K20003
K27016
K26248

Pos.	Artikelbeschreibung	Description of item	Artikel Nr./Item No.
K00168	Dichtung	Sealing	E0K00168
K20002 +K20003	Türscharnierset z. Backofen	Door hinge set f. oven	E0BN6A0359
K20004	Gegenstück z. Türscharnier	Counterpiece f. door hinge	E0MA1304500
K25019	Bodenblech	Bottom plate	053571
K26245	Rost, 2/1 GN	Grid, 2/1 GN	049105
K26248	Türgriff	Door handle	049058
K26410	Rostaufnahme	Grid rail	049554
K27016	Isolierung	Insulation	048709
K92261	Ofenboden	Oven base	E0K92261

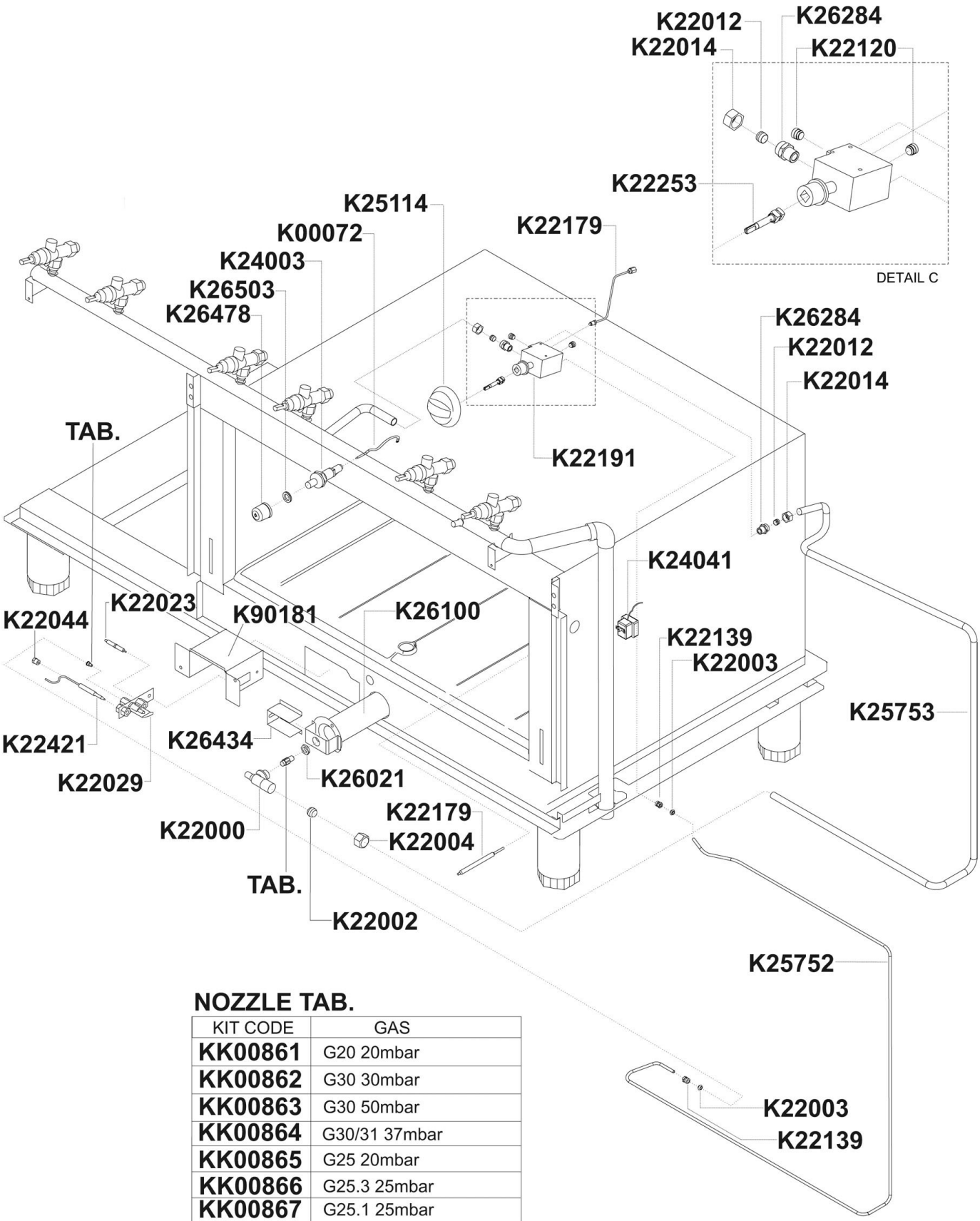

NOZZLE TAB.

KIT CODE	GAS
KK00861	G20 20mbar
KK00862	G30 30mbar
KK00863	G30 50mbar
KK00864	G30/31 37mbar
KK00865	G25 20mbar
KK00866	G25.3 25mbar
KK00867	G25.1 25mbar
KK00868	G20 25mbar
KK00869	G110 8mbar

Pos.	Artikelbeschreibung	Description of item	Artikel Nr./Item No.
K00072	Zündkabel	IGNITION CABLE	049068
K22000	Düsenträger D10	Nozzle holder D10	E051047
K22002	Doppelkegelring D 10 mm	Double taper seal D 10 mm	049818
K22003	Schneidring	Cutting ring	0MA673600
K22004	Mutter f. Doppelkegelring	Nut f. double taper seal	049819
K22012	Doppelkegelring D 12 mm	Double taper seal D 12 mm	024543
K22014	Mutter D 12 mm, 20 x 1,5 mm	Nut D 12 mm, 20 x 1,5 mm	024542
K22023	Zündkerze	Ignition plug	01888300
K22029	Zündbrenner	Ignition burner	049073
K22044	Verschraubung z. Thermoelement	Screw connection f. thermocouple	020219
K22120	Kegelventil z. Eurosit Armatur	Cone valve f. Eurosit Armature	049638
K22139	Muffennippel, Messing	Bush nipple, brass	024540
K22179	Verlängerung M 9 x 1	Extension M 9 x 1	049067
K22191	Gasventil 60 - 300° C	Gas valve 60-300° C	E060249
K22253	Verlängerung z. Knebel	Knob extension	049264
K22421	Thermoelement	Thermocouple	E0K22421
K24003	Piezozünder D 18 mm	Piezo igniter D 18 mm	049069
K24041	Sicherheitsthermostat L.120	Safety thermostat L.120	049389
K25114	Knebel 8 x 6,5	Knob 8 x 6,5	049265
K25752	Leitung zur Zündflamme	Pilot flame pipe	E0K25752
K25753	Brennerleitung	Burner pipe	E0K25753
K26021	Mutter M 14 x 1	Nut M 14 x 1	049339
K26100	Brenner D 40	Burner D 40	049070
K26284	Ventilarmatur 3/8"-1/2 "D 12	Valve fitting 3/8"-1/2 "D 12	E0K26284
K26434	Lufteinstellscheibe	Air focusing screen	E0K26434
K26478	Kappe	Cap	E051050
K26503	Unterlegscheibe	Flat washer	E051051
K90181	Abdeckung	Cover	048710
KK00861	Düsensatz G20 20 mbar	Nozzle kit G20 20 mbar	E0KK00861
KK00862	Düsensatz G30 28-30 mbar	Nozzle kit G30 28-30 mbar	E0KK00862
KK00863	Düsensatz G30 50 mbar	Nozzle kit G30 50 mbar	E0KK00863
KK00864	Düsensatz G30/31 37 mbar	Nozzle kit G30/31 37 mbar	E0KK00864
KK00865	Düsensatz G25 20 mbar	Nozzle kit G25 20 mbar	E0KK00865
KK00866	Düsensatz G25 3-25 mbar	Nozzle kit G25 3-25 mbar	E0KK00866
KK00867	Düsensatz G25 1-25 mbar	Nozzle kit G25 1-25 mbar	E0KK00867
KK00868	Düsensatz G20 25 mbar	Nozzle kit G20 25 mbar	E0KK00868
KK00869	Düsensatz G110 8 mbar	Nozzle kit G110 8 mbar	E0KK00869